REV.	DESCRIPTION	DRAWN	DATE
		APPD.	DATE

A2

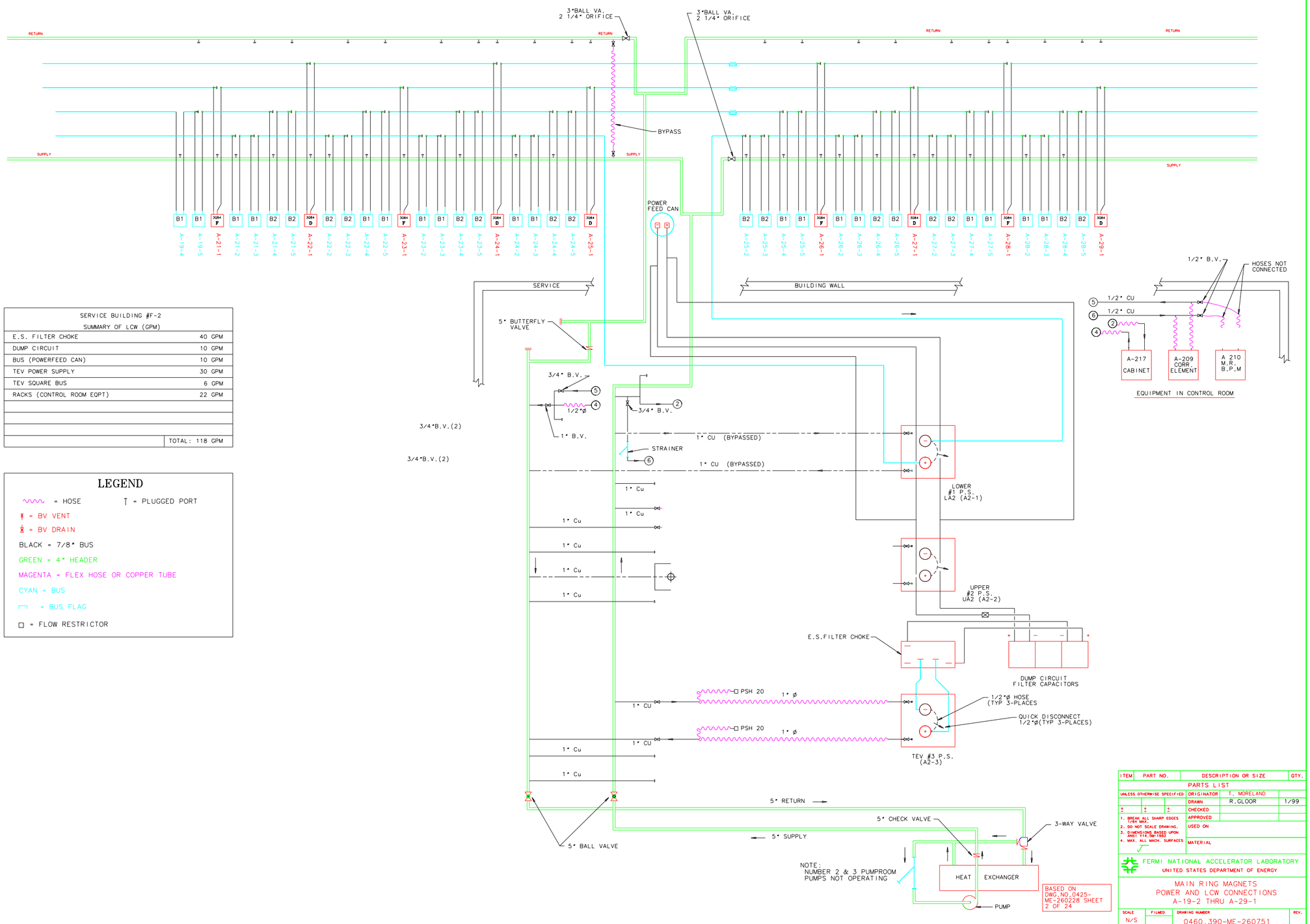

SERVICE BUILDING #F-2 SUMMARY OF LCW (GPM)	
E.S. FILTER CHOKE	40 GPM
DUMP CIRCUIT	10 GPM
BUS (POWERFEED CAN)	10 GPM
TEV POWER SUPPLY	30 GPM
TEV SQUARE BUS	6 GPM
RACKS (CONTROL ROOM EQPT)	22 GPM
	TOTAL: 118 GPM

LEGEND

- = HOSE
- = PLUGGED PORT
- = BV VENT
- = BV DRAIN
- BLACK = 7/8" BUS
- GREEN = 4" HEADER
- MAGENTA = FLEX HOSE OR COPPER TUBE
- CYAN = BUS
- = BUS FLAG
- = FLOW RESTRICTOR

ITEM	PART NO.	DESCRIPTION OR SIZE	QTY.
PARTS LIST			

UNLESS OTHERWISE SPECIFIED				
			ORIGINATOR	T. MORELAND
			DRAWN	R.GLOOR 1/99
±	±	±	CHECKED	
1. BREAK ALL SHARP EDGES 1/64 MAX.			APPROVED	
2. DO NOT SCALE DRAWING.			USED ON	
3. DIMENSIONS BASED UPON ANSI Y14.5M-1982				
4. MAX. ALL MACH. SURFACES			MATERIAL	

FERMI NATIONAL ACCELERATOR LABORATORY
UNITED STATES DEPARTMENT OF ENERGY

MAIN RING MAGNETS
POWER AND LCW CONNECTIONS
A-19-2 THRU A-29-1

SCALE	FILMED	DRAWING NUMBER	REV.
N/S		0460.390-ME-260751	

CADFILE: 260751.dwg
CREATED WITH I-DEAS_VI
USER NAME: gloor