REV.	DESCRIPTION	DRAWN	DATE
		APPD.	DATE

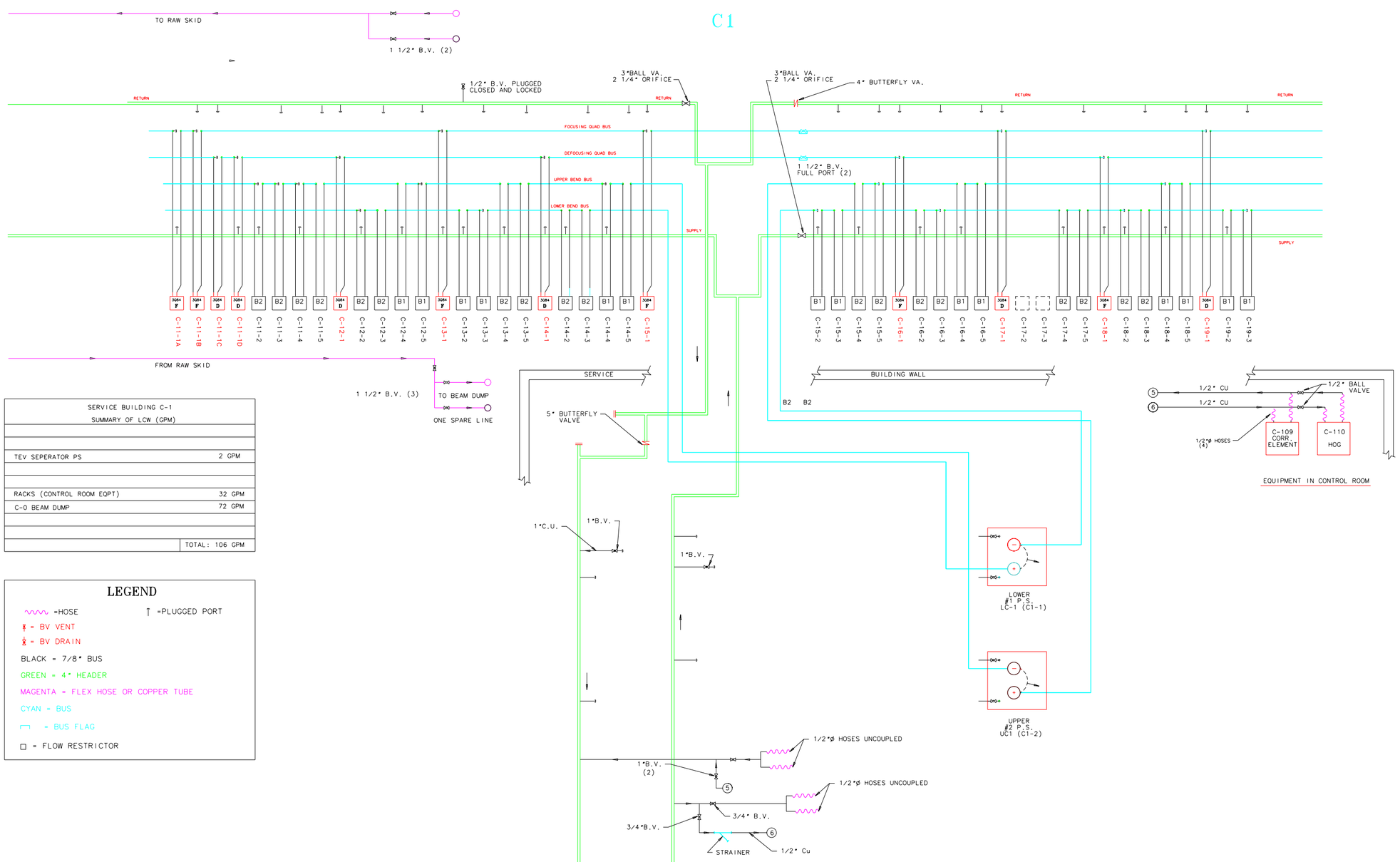

SERVICE BUILDING C-1 SUMMARY OF LCW (GPM)	
TEV SEPERATOR PS	2 GPM
RACKS (CONTROL ROOM EQPT)	32 GPM
C-0 BEAM DUMP	72 GPM
	TOTAL: 106 GPM

LEGEND

- =HOSE
- =PLUGGED PORT
- = BV VENT
- = BV DRAIN
- BLACK = 7/8" BUS
- GREEN = 4" HEADER
- MAGENTA = FLEX HOSE OR COPPER TUBE
- CYAN = BUS
- = BUS FLAG
- = FLOW RESTRICTOR

ITEM	PART NO.	DESCRIPTION OR SIZE	QTY.
PARTS LIST			

UNLESS OTHERWISE SPECIFIED	ORIGINATOR	T. MORELAND
	DRAWN	R.GLOOR 8/99
± ± ±	CHECKED	
1. BREAK ALL SHARP EDGES 1/64 MAX.	APPROVED	
2. DO NOT SCALE DRAWING.	USED ON	
3. DIMENSIONS BASED UPON ANSI Y14.5M-1982.		
4. MAX. ALL MACH. SURFACES	MATERIAL	

FERMI NATIONAL ACCELERATOR LABORATORY
UNITED STATES DEPARTMENT OF ENERGY

MAIN RING MAGNETS
POWER AND LCW CONNECTIONS
C-11-1A THRU C-19-3

BASED ON DWG.NO.0425-ME-260455 SHEET 9 OF 24

SCALE	FILMED	DRAWING NUMBER	REV.
N/S		0460.390-ME-260760	

CADFILE: 260760.dwg CREATED WITH I-DEAS_VI USER NAME: gloor