REV.	DESCRIPTION	DRAWN / APPD.	DATE
A	MODIFIED FOR RECYCLER RING.	L.KOZIEN	8/98
	ADDED ABORT LINE MAGNET STRING.	S.OPLT	5/99
	AS BUILT.		

MI-40 LCW FLOW SCHEMATIC
Q410 - Q340

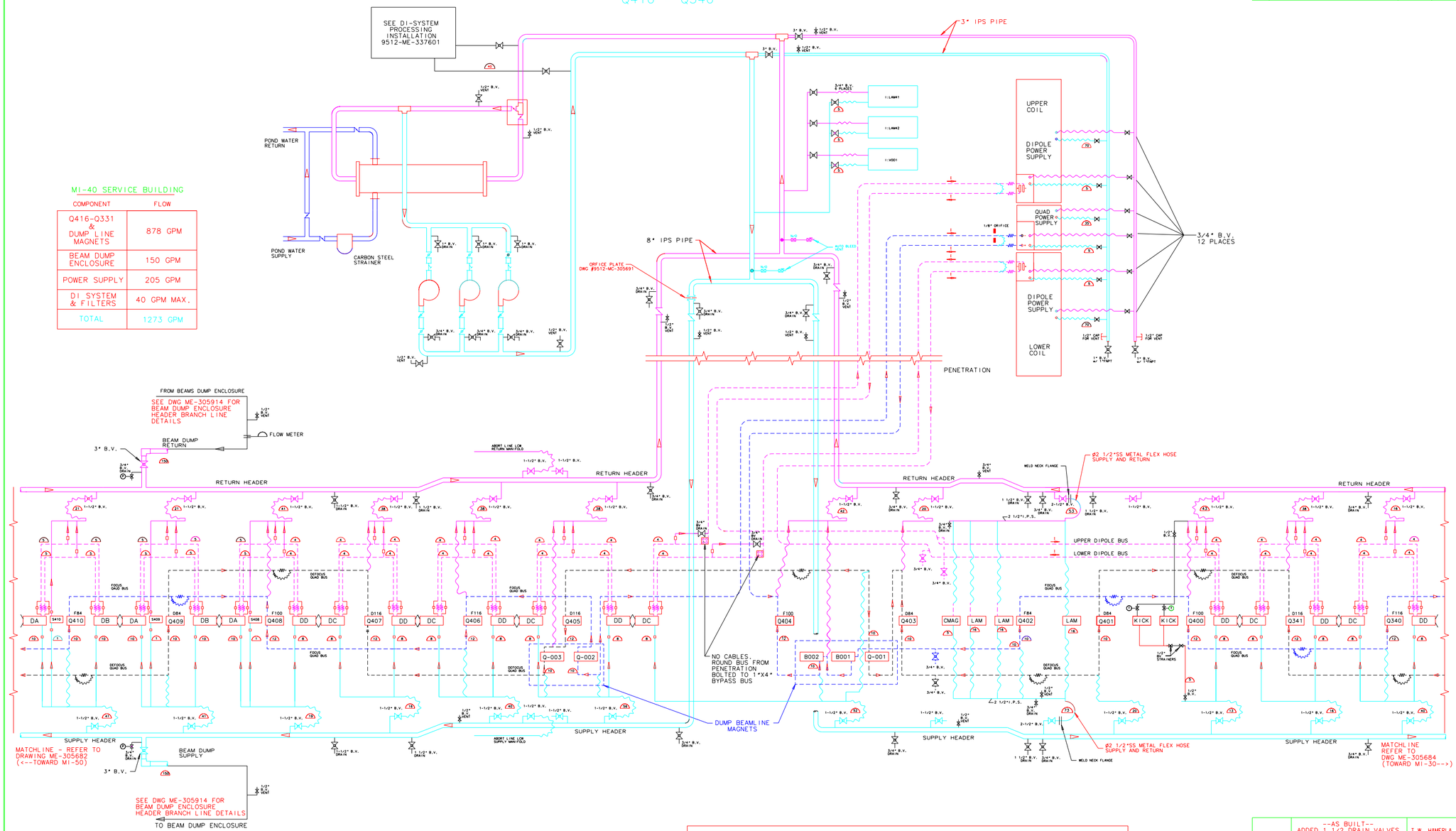

MI-40 SERVICE BUILDING

COMPONENT	FLOW
Q416-Q331 & DUMP LINE MAGNETS	878 GPM
BEAM DUMP ENCLOSURE	150 GPM
POWER SUPPLY	205 GPM
DI SYSTEM & FILTERS	40 GPM MAX.
TOTAL	1273 GPM

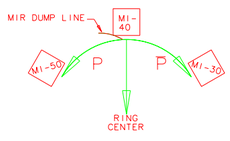

SYMBOL LEGEND

- LCW ONLY (SIZE) PRIMARY
- LCW ONLY - PIPE (SECONDARY)
- CURRENT BUS WITH LCW
- FLOW (GPM)
- EPDM HOSE
- PEEK ELECTRIC INSULATOR
- CURRENT ONLY CONNECTOR
- PLUG - LCW
- FLEXIBLE COPPER CONNECTOR
- TAP/WELD-O-LET (SIZE) W/ CAP OR PLUG
- ORIFICE
- QUAD BUS-LCW AND ELECTICAL EXPANSION/ISOLATION JOINT

LCW MAGNETS/DEVICES

DA	6m DIPOLE "A"	LAM	LAMBERTSON
DB	6m DIPOLE "B"	KICK	KICKER
DC	4m DIPOLE "C"	C-MAG	C-MAGNET
DD	4m DIPOLE "D"	Q###	M.R.QUAD(SIZE)
S###	SEXTUPOLE	B2	M.R. B2 DIPOLE

(F/D)### — F84, D84: FOCUS OR DEFOCUS 84" QUAD
F100, D100: FOCUS OR DEFOCUS 100" QUAD
F116, D116: FOCUS OR DEFOCUS 116" QUAD

Q### — QUAD AND CELL #

BALL VALVE (SIZE) — VENTS / DRAINS

DATE	DESCRIPTION OF CHANGES	VERSIONS BY
2/11/98	--AS BUILT-- ADDED 1 1/2 DRAIN VALVES AT ALCOVES AND 3/4 BALL VALVES ON END OF RUNS IN SERVICE BUILDINGS	T.W. HAMERLA M. P. MAY KARL WILLIAMS
8/20/97	ADDED CURRENT FLOW FOR BUS. ADDED EXPANION/ISOLATION JOINTS FOR QUAD BUS	GUNDELACH

REVISION HISTORY

UNLESS OTHERWISE SPECIFIED			
ORIGINATOR	J. A. SATTI		SEPT'95
DRAWN	RUSH		7.SEPT'97
CHECKED			
APPROVED			
USED ON			
MATERIAL			

1. BREAK ALL SHARP EDGES 1/64 MAX.
2. DO NOT SCALE DRAWING.
3. DIMENSIONS BASED UPON ANSI Y14.5M-1982.
4. MAX. ALL MACH. SURFACES

FERMI NATIONAL ACCELERATOR LABORATORY
UNITED STATES DEPARTMENT OF ENERGY

MAIN INJECTOR HYDRAULIC
LCW AND BUS FLOW SCHEMATIC
MI-40 SER. BLDG - Q410 to Q340

SCALE	FILMED	DRAWING NUMBER	REV.
NA		9512-ME-305683	A

CADFILE: 305683a.dwg — CREATED WITH I-DEAS_V1 — USER NAME: HAMERLA