REV.	DESCRIPTION	DRAWN	DATE
		APPD.	DATE
A	MODIFIED FOR RECYCLER. AS BUILT.	S.OPLT	5/99

MIR LCW FLOW SCHEMATIC
Q339 - Q326
Q325 - Q312

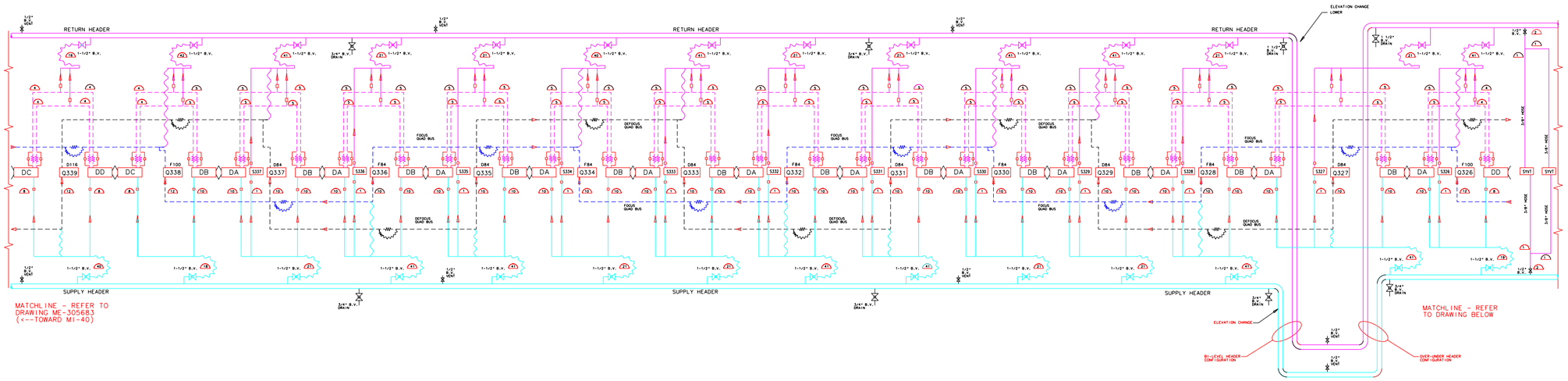

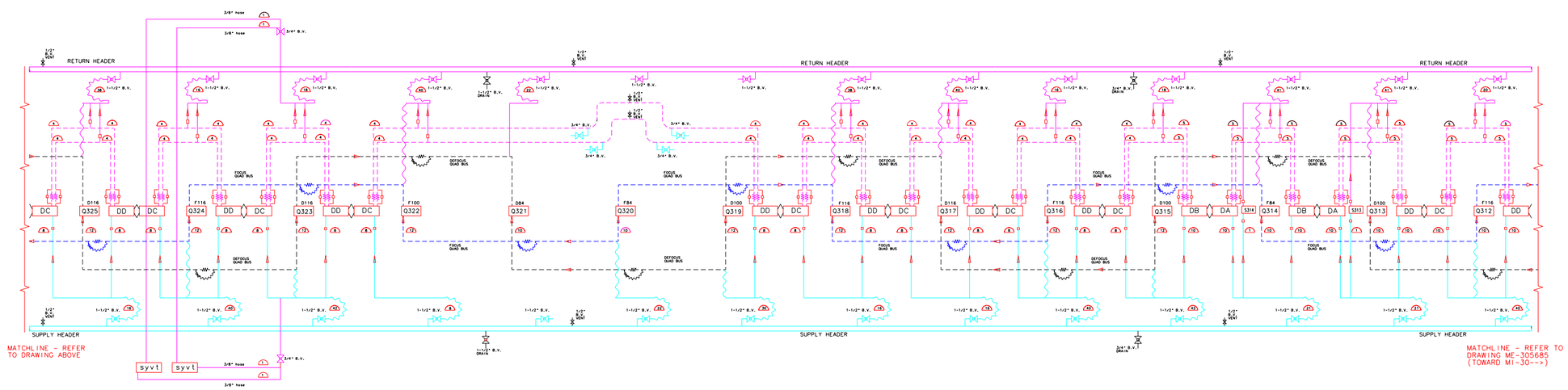

SYMBOL LEGEND

- LCW ONLY (SIZE) PRIMARY
- LCW ONLY - PIPE (SECONDARY)
- CURRENT BUS WITH LCW
- FLOW (GPM)
- EPDM HOSE
- PEEK ELECTRIC INSULATOR
- CURRENT ONLY CONNECTOR
- PLUG - LCW
- FLEXIBLE COPPER CONNECTOR
- TAP/WELD-O-LET (SIZE) W/ CAP OR PLUG
- QUAD BUS-LCW AND ELECTICAL EXPANSION/ISOLATION JOINT

LCW MAGNETS/DEVICES

DA	6m DIPOLE "A"	LAM	LAMBERTSON
DB	6m DIPOLE "B"	KICK	KICKER
DC	4m DIPOLE "C"	C-MAG	C-MAGNET
DD	4m DIPOLE "D"	Q###	M.R.QUAD(SIZE)
S###	SEXTUPOLE	B2	M.R. B2 DIPOLE

(F/D)### — F84, D84: FOCUS OR DEFOCUS 84" QUAD
F100, D100: FOCUS OR DEFOCUS 100" QUAD
F116, D116: FOCUS OR DEFOCUS 116" QUAD

Q### — QUAD AND CELL #

BALL VALVE (SIZE) — VENTS / DRAINS

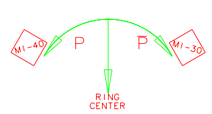

DATE	DESCRIPTION OF CHANGES	VERSIONS BY
2/11/98	--AS BUILT-- ADDED 1 1/2 DRAIN VALVES AT ALCOVES AND 3/4 BALL VALVES ON END OF RUNS IN SERVICE BUILDINGS	T.W. HAMERLA M. P. MAY KARL WILLIAMS
8/20/97	ADDED CURRENT FLOW FOR BUS. ADDED EXPANION/ISOLATION JOINTS FOR QUAD BUS	GUNDELACH

REVISION HISTORY

UNLESS OTHERWISE SPECIFIED				
ORIGINATOR	J. A. SATTI		SEPT'95	
DRAWN	RUSH		7.SEPT'97	
CHECKED				
APPROVED				
USED ON				
MATERIAL				

1. BREAK ALL SHARP EDGES 1/64"MAX.
2. DO NOT SCALE DRAWING.
3. DIMENSIONS BASED UPON ANSI Y14.5M-1982
4. MAX. ALL MACH. SURFACES 125

FERMI NATIONAL ACCELERATOR LABORATORY
UNITED STATES DEPARTMENT OF ENERGY

MAIN INJECTOR HYDRAULIC
LCW AND BUS FLOW SCHEMATIC
Q339 to Q312

SCALE	FILMED	DRAWING NUMBER	REV.
NA		9512-ME-305684	A

CREATED WITH I-DEAS_VI | USER NAME:HAMERLA

CADFILE: 305684a.dwg