REV.	DESCRIPTION	DRAWN:	DATE
		APPD.	DATE
A	MODIFIED FOR RECYCLER. AS BUILT.	S.OPLT	5/99

MI-30 LCW FLOW SCHEMATIC
Q311 - Q231

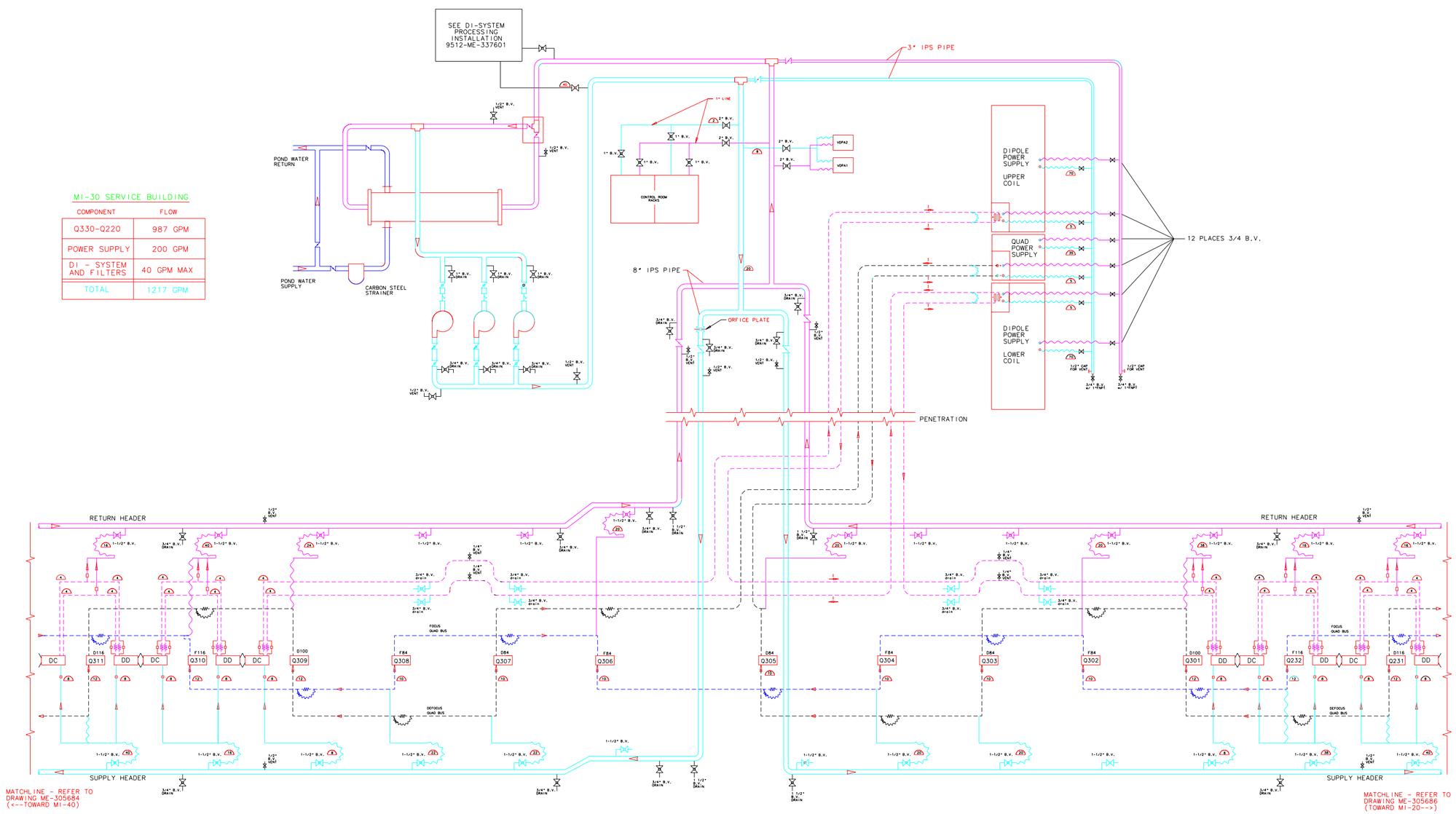

MI-30 SERVICE BUILDING

COMPONENT	FLOW
Q330-Q220	987 GPM
POWER SUPPLY	200 GPM
DI - SYSTEM AND FILTERS	40 GPM MAX
TOTAL	1217 GPM

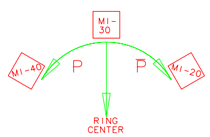

SYMBOL LEGEND

- LCW ONLY (SIZE) PRIMARY
- LCW ONLY - PIPE (SECONDARY)
- CURRENT BUS WITH LCW
- FLOW (GPM)
- EPDM HOSE
- PEEK ELECTRIC INSULATOR
- CURRENT ONLY CONNECTOR
- PLUG - LCW
- FLEXIBLE COPPER CONNECTOR
- TAP/WELD-O-LET (SIZE) W/ CAP OR PLUG
- QUAD BUS-LCW AND ELECTICAL EXPANSION/ISOLATION JOINT

LCW MAGNETS/DEVICES

DA	6m DIPOLE "A"	LAM	LAMBERTSON
DB	6m DIPOLE "B"	KICK	KICKER
DC	4m DIPOLE "C"	C-MAG	C-MAGNET
DD	4m DIPOLE "D"	Q###	M.R.QUAD(SIZE)
S###	SEXTUPOLE	B2	M.R. B2 DIPOLE
(F/D)###	F84, D84: FOCUS OR DEFOCUS 84" QUAD		
Q###	QUAD AND CELL #		F100, D100: FOCUS OR DEFOCUS 100" QUAD
			F116, D116: FOCUS OR DEFOCUS 116" QUAD

BALL VALVE (SIZE) — VENTS / DRAINS

DATE	DESCRIPTION OF CHANGES	VERSIONS BY
2/11/98	--AS BUILT-- ADDED 1 1/2 DRAIN VALVES AT ALCOVES AND 3/4 BALL VALVES ON END OF RUNS IN SERVICE BUILDINGS	T.W. HAMERLA M. P. MAY KARL WILLIAMS
8/20/97	ADDED CURRENT FLOW FOR BUS. ADDED EXPANION/ISOLATION JOINTS FOR QUAD BUS	GUNDELACH

REVISION HISTORY

UNLESS OTHERWISE SPECIFIED				
ORIGINATOR	J. A. SATTI			SEPT'95
DRAWN	RUSH			7.SEPT'97
CHECKED				
APPROVED				
USED ON				
MATERIAL				

1. BREAK ALL SHARP EDGES 1/64 MAX.
2. DO NOT SCALE DRAWING.
3. DIMENSIONS BASED UPON ANSI Y14.5M-1982
4. MAX. ALL MACH. SURFACES 125

FERMI NATIONAL ACCELERATOR LABORATORY
UNITED STATES DEPARTMENT OF ENERGY

MAIN INJECTOR HYDRAULIC
LCW AND BUS FLOW SCHEMATIC
MI-30 SER. BLDG - Q311 to Q231

SCALE	FILMED	DRAWING NUMBER	REV.
NA		9512-ME-305685	A

CADFILE: 305685a.dwg
CREATED WITH I-DEAS_VI
USER NAME:HAMERLA